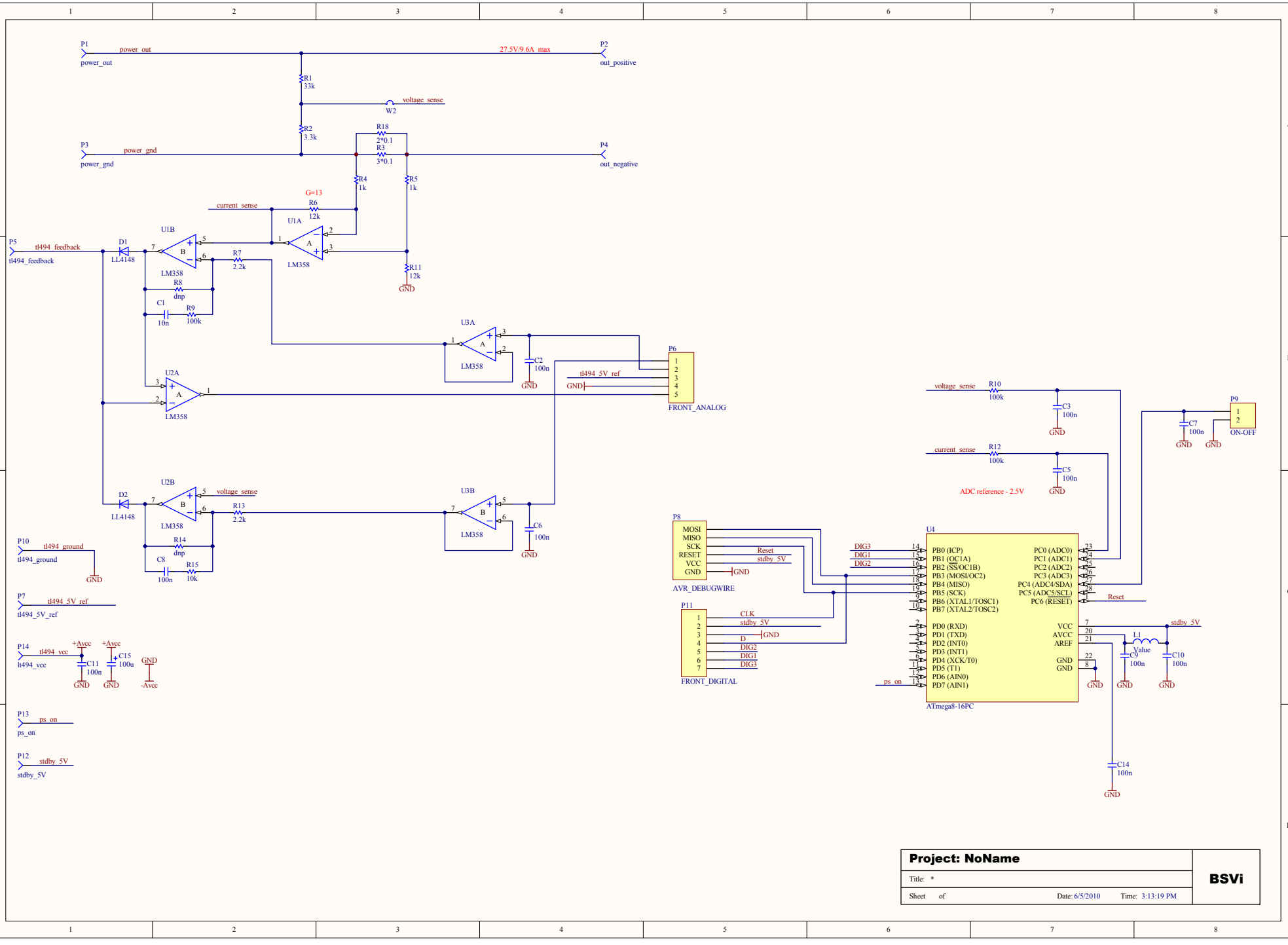
P1
power_out
power_out
27.5V/9.6A_max
P2
out_positive
R1
33k
voltage_sense
W2
R2
3.3k
R18
2*0.1
R3
3*0.1
P3
power_gnd
power_gnd
P4
out_negative
R4
1k
R5
1k
G=13
current_sense
R6
12k
U1A
U1B
P5
tl494_feedback
tl494_feedback
D1
LL4148
LM358
R7
2.2k
R11
12k
GND
R8
dnp
C1
10n
R9
100k
U3A
C2
100n
P6
tl494_5V_ref
GND
FRONT_ANALOG
U2A
U2B
D2
LL4148
voltage_sense
R13
2.2k
U3B
C6
100n
R14
dnp
C8
100n
R15
10k
P10
tl494_ground
tl494_ground
P7
tl494_5V_ref
tl494_5V_ref
P14
tl494_vcc
tl494_vcc
+Avcc
C11
100n
C15
100u
-Avcc
P13
ps_on
ps_on
P12
stdby_5V
stdby_5V
voltage_sense
R10
100k
C3
100n
current_sense
R12
100k
C5
100n
ADC reference - 2.5V
P9
C7
100n
ON-OFF
P8
MOSI
MISO
SCK
RESET
VCC
GND
Reset
stdby_5V
AVR_DEBUGWIRE
P11
CLK
stdby_5V
D
DIG2
DIG1
DIG3
FRONT_DIGITAL
U4
DIG3
DIG1
DIG2
PB0 (ICP)
PB1 (OC1A)
PB2 (SS/OC1B)
PB3 (MOSI/OC2)
PB4 (MISO)
PB5 (SCK)
PB6 (XTAL1/TOSC1)
PB7 (XTAL2/TOSC2)
PD0 (RXD)
PD1 (TXD)
PD2 (INT0)
PD3 (INT1)
PD4 (XCK/T0)
PD5 (T1)
PD6 (AIN0)
PD7 (AIN1)
ps_on
PC0 (ADC0)
PC1 (ADC1)
PC2 (ADC2)
PC3 (ADC3)
PC4 (ADC4/SDA)
PC5 (ADC5/SCL)
PC6 (RESET)
VCC
AVCC
AREF
GND
GND
ATmega8-16PC
L1
Value
C9
100n
C10
100n
C14
100n
Project: NoName
Title: *
Sheet of
Date: 6/5/2010
Time: 3:13:19 PM
BSVi